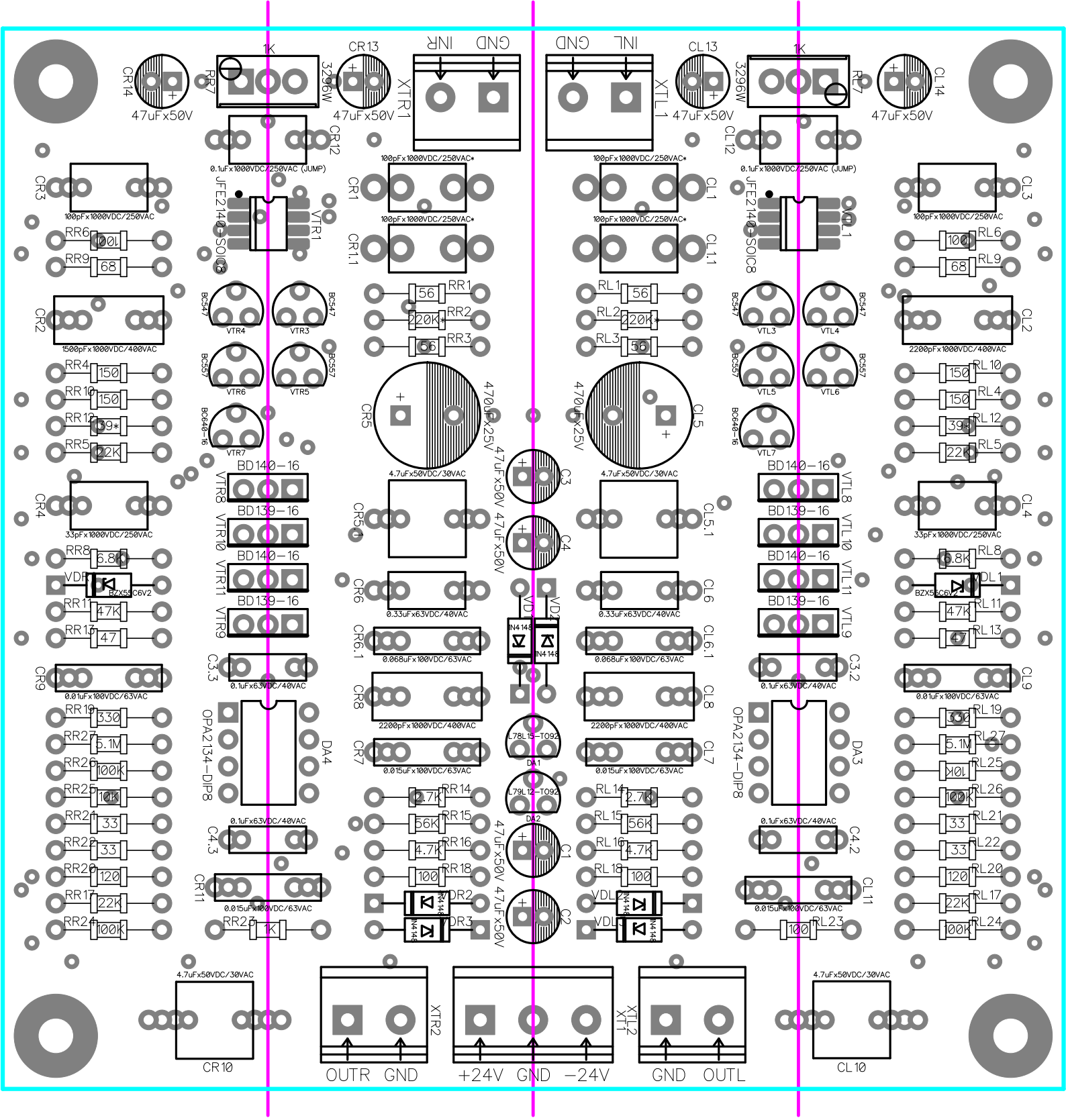
CR14
47uFx50V
RR7
1K
3296W
CR13
47uFx50V
GND
INR
XTR1
GND
INL
XTL1
CL13
47uFx50V
3296W
1K
RL7
CL14
47uFx50V
CR12
0.1uFx1000VDC/250VAC (JUMP)
CR12
0.1uFx1000VDC/250VAC (JUMP)
CR3
100pFx1000VDC/250VAC
JFE2140-SOIC8
VTR1
CR1
100pFx1000VDC/250VAC*
CR1.1
100pFx1000VDC/250VAC*
CL1
100pFx1000VDC/250VAC*
CL1.1
100pFx1000VDC/250VAC*
JFE2140-SOIC8
VTL1
CL3
100pFx1000VDC/250VAC
RR6
100
RR9
68
RR1
56
RR2
220K
RR3
56
RL1
56
RL2
220K
RL3
56
RL6
100
RL9
68
CR2
1500pFx1000VDC/400VAC
BC547
VTR4
BC547
VTR3
BC557
VTR6
BC557
VTR5
BC640-16
VTR7
BC547
VTL3
BC547
VTL4
BC557
VTL5
BC557
VTL6
BC640-16
VTL7
CL2
2200pFx1000VDC/400VAC
RR4
150
RR10
150
RR12
39*
RR5
22K
RL10
150
RL4
150
RL12
39*
RL5
22K
CR5
470uFx25V
4.7uFx50VDC/30VAC
CL5
470uFx25V
4.7uFx50VDC/30VAC
C3
47uFx50V
C4
47uFx50V
CR4
33pFx1000VDC/250VAC
BD140-16
VTR8
BD139-16
VTR10
BD140-16
VTR11
BD139-16
VTR9
CR5.1
CL5.1
BD140-16
VTL8
BD139-16
VTL10
BD140-16
VTL11
BD139-16
VTL9
CL4
33pFx1000VDC/250VAC
RR8
6.8K
VDR1
BZX55C6V2
RR11
47K
RR13
47
CR6
0.33uFx63VDC/40VAC
CR6.1
0.068uFx100VDC/63VAC
VD1
1N4148
VD2
1N4148
CL6
0.33uFx63VDC/40VAC
CL6.1
0.068uFx100VDC/63VAC
RL8
6.8K
VDL1
BZX55C6V2
RL11
47K
RL13
47
CR9
0.01uFx100VDC/63VAC
RR19
330
RR27
5.1M
RR26
100K
RR25
10K
RR21
33
RR22
33
RR20
120
RR17
22K
RR24
100K
C3.3
0.1uFx63VDC/40VAC
OPA2134-DIP8
DA4
0.1uFx63VDC/40VAC
C4.3
CR11
0.015uFx100VDC/63VAC
RR23
1K
CR8
2200pFx1000VDC/400VAC
CR7
0.015uFx100VDC/63VAC
DA1
L78L15-TO92
DA2
L79L12-TO92
RR14
2.7K
RR15
56K
RR16
4.7K
RR18
100
DR2
1N4148
DR3
1N4148
C1
47uFx50V
C2
47uFx50V
CL8
2200pFx1000VDC/400VAC
CL7
0.015uFx100VDC/63VAC
RL14
2.7K
RL15
56K
RL16
4.7K
RL18
100
VDL2
1N4148
VDL3
1N4148
C3.2
0.1uFx63VDC/40VAC
OPA2134-DIP8
DA3
0.1uFx63VDC/40VAC
C4.2
CL11
0.015uFx100VDC/63VAC
RL23
100
CL9
0.01uFx100VDC/63VAC
RL19
330
RL27
5.1M
RL25
10K
RL26
100K
RL21
33
RL22
33
RL20
120
RL17
22K
RL24
100K
4.7uFx50VDC/30VAC
CR10
XTR2
OUTR
GND
+24V
GND
-24V
XTL2
XTL1
GND
OUTL
4.7uFx50VDC/30VAC
CL10