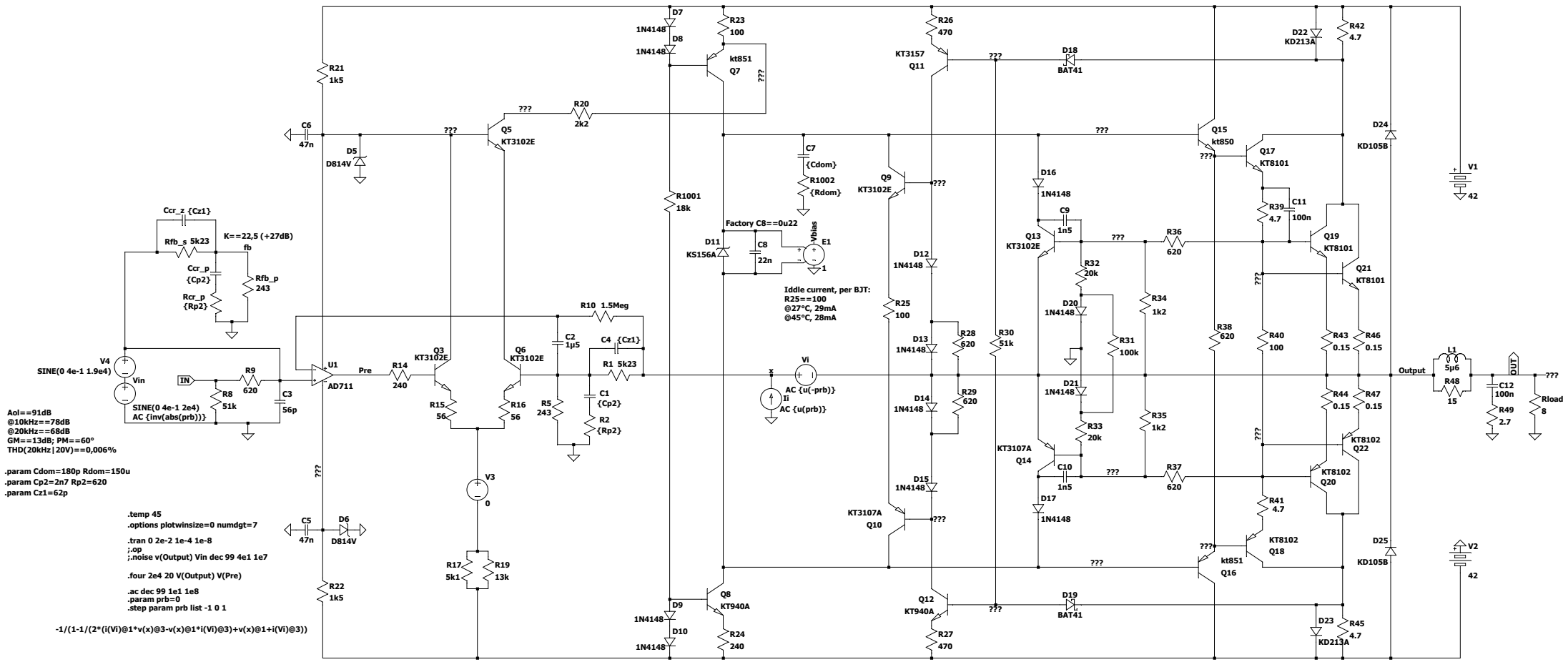

--- C:\Users\Tony\Desktop\v4_Корвет_100У-068СМ.asc ---